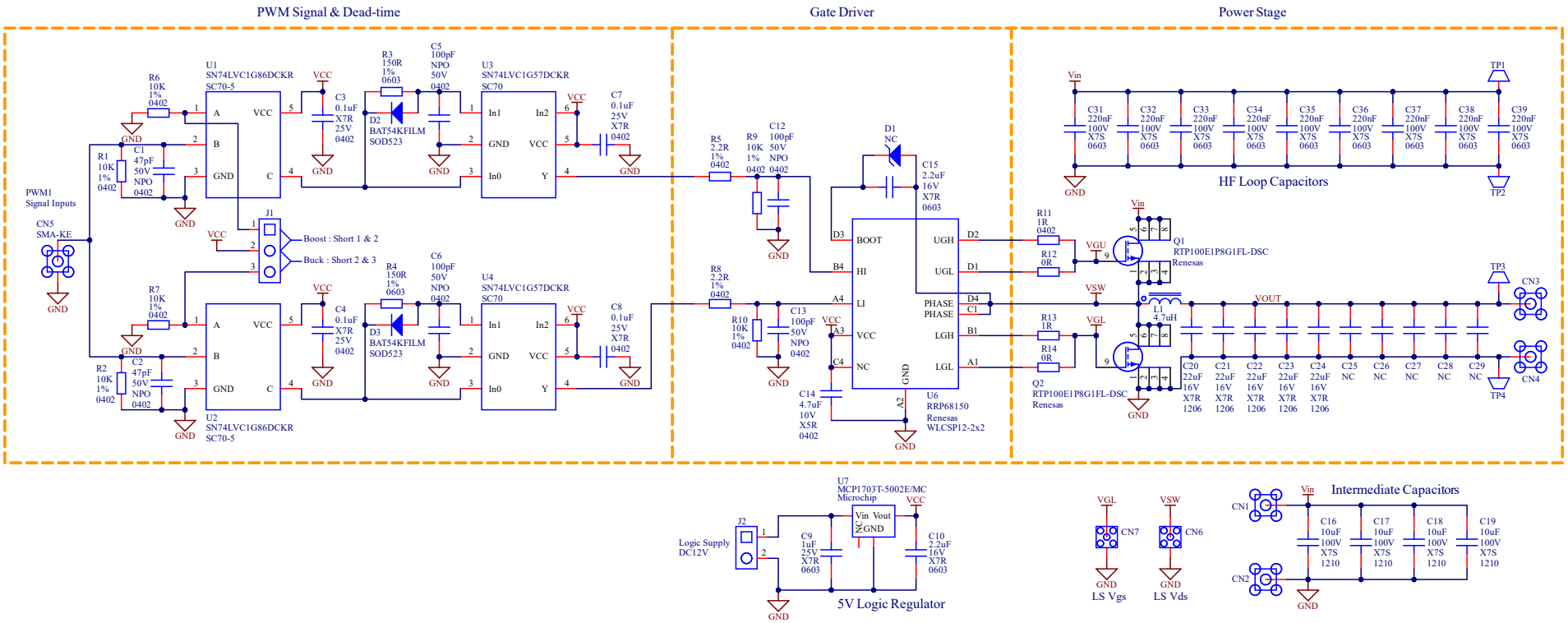EVB-RTP100E1P8G1FL-DSC Schematic Diagram